PCB Model Name: F4S V1.1
Product Name: M.2 NVMe Extender

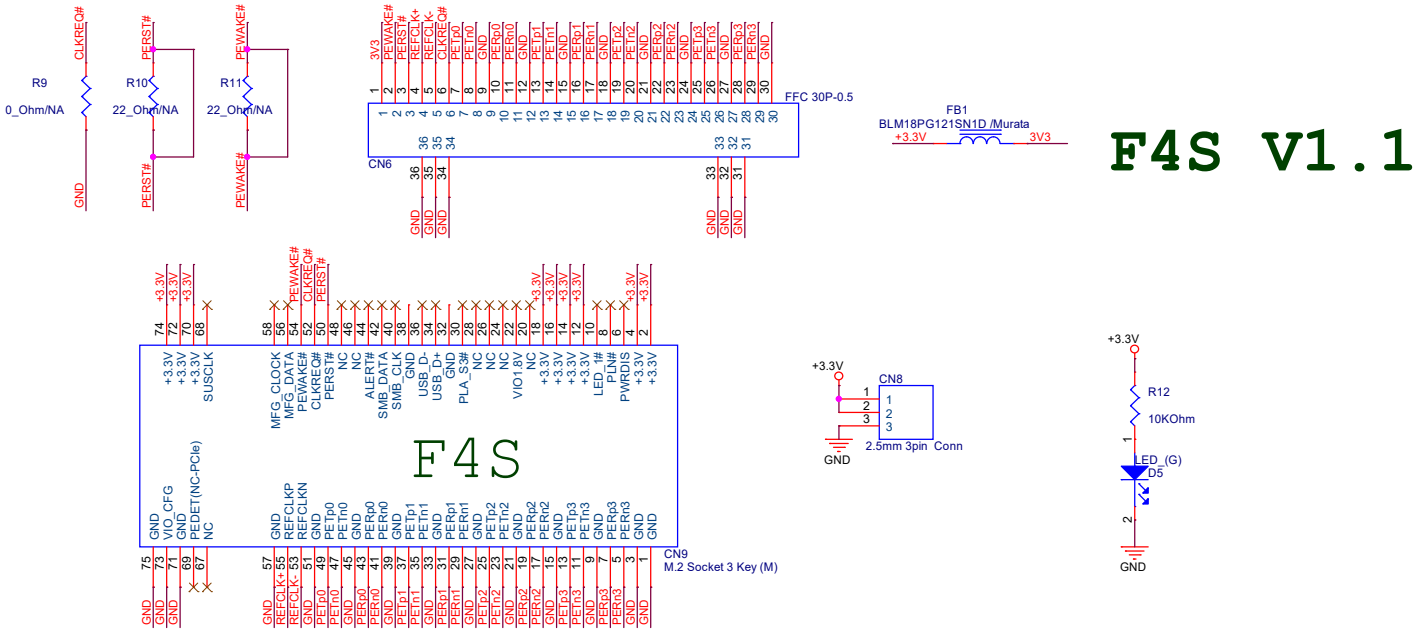

Rivision History

Date	Version	Description
2024Oct14	1.0	First Release

PCB Model Name: F7F V1.1
Product Name: U.2 NVMe Extender

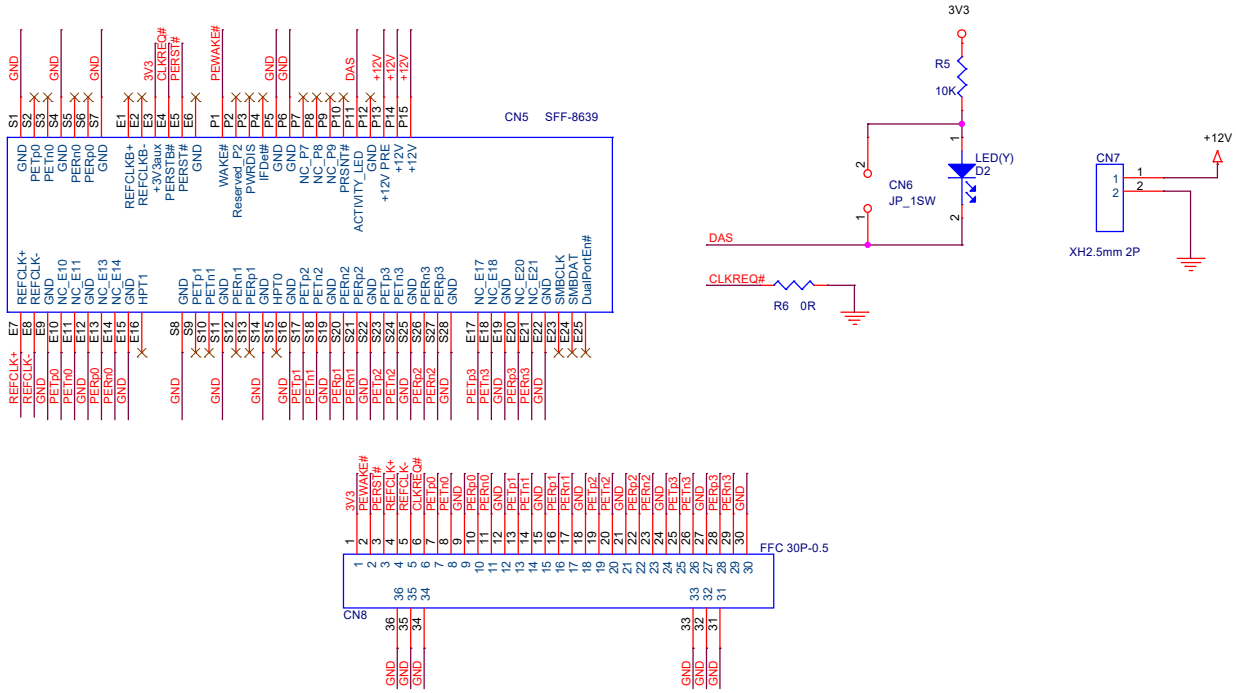

Rivision History

Date	Version	Description
20250103	1.1	First Release